GUELL 2

Long-lasting energy-efficient architectural, landscape and professional flood light series. Fixtures consist of:

- Copper-free precision die-cast aluminum housing, and adjustable steel mounting bracket.
- Extra-clear, flat, tempered silk-screened soda-lime glass diffuser.
- Custom molded, anti-aging gasket(s).
- Stainless steel external hardware.
- High-efficiency COB, combined with an optimized passive cooling system, provides a long LED life.
- Internal specular reflector coated with 5-layers of PVD 99.98% pure aluminum providing >95% reflection.
- NEMA 5H x 5V light distribution (C/IW)
- NEMA 7H x 5V light distribution (S/W).
- NEMA 7H x 5V light distribution (Type II).
- Input voltage: 120-277 V (50 / 60 Hz), integral 0-10 V dimming driver.
- Pre-wired factory sealed cable for external electrical connection included. (5.5' Standard)
- Standard quick release latch(es) allow for tool-free access.
- Standard heavy-duty slip-fitter (SF versions) for 2 3/8" OD pipe for a simplified installation.
- Louver, frosted glass, protective grid, wall support 19.69" / 39.37", single or double pole top support, and matching junction box plate accessories available (ordered separately).
- Consult factory for dimming options, custom finishes (please specify RAL color), and non-cataloged CCT (Kelvin) options.
- Consult factory for custom pre-wired factory sealed cable length options.
- Product meets Buy American Act requirements within ARRA.
- 5-year warranty.
- Marine Grade finish.
- Suitable for Natatorium applications.

IP 66 · WET · PRONTO · LISTED · 0-10 V · RAL · MARINE LISTED 1598A · IK 07 3 J

FINISHES

- GR-94 / Aluminum metallic / Textured
- RB-10 / Iron rust / Textured
- BK-81 / Black / Textured
- AN-96 / Iron gray / Textured
- WH-87 / White / Textured

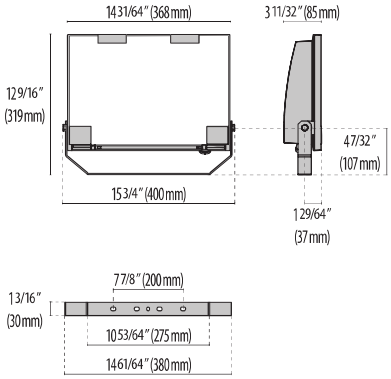

GUELL
2

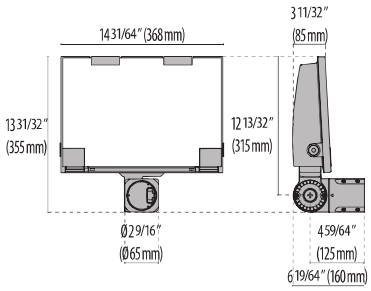

GUELL
2 SF

Lumen Output	3K	4K
Guell 2 C/IW 90W	8085	8210
Guell 2 C/IW 110W	10392	10517
Guell 2 S/W 90W	8812	8937
Guell 2 S/W 110W	11012	11137
Guell 2 T2 90W	8595	8720
Guell 2 T2 110W	10719	10844

Scan here for installation instructions

Revision 08
01/24

Order Guide - Guell Two

Order code example	GU2

GU2							

Housing Style	Wattage	Optics	Finish	Kelvin	Voltage	Controls	Accessories
YO Yoke **SF** Slipfitter	**90** 90 watt **110** 110 watt (max) **XX** Specify Wattage Must be below max	**C/IW** nema 5Hx5V **S/W** nema 7Hx5V **A/W** nema 6Hx5V	**AM** Aluminum Metallic **IG** Iron Gray **IR** Iron Rust **BK** Textured Black **WH** Textured White **CC** Custom Color	**2K** 2000k **27K** 2700k **3K** 3000k **35K** 3500k **4K** 4000k **5K** 5000k **65K** 6500k **RED** Static Red **GRN** Static Green **BLU** Static Blue **RGBW** RGBW Contact factory for control details	**UNV** 120-277V	**NA** Non Dimming **0-10V** 0-10V Dimming **ELV** ELV Dimming	**COV** Cover Asymmetrical **LVR** Louver Asymmetrical **LVR2** Louver Symmetrical **FRST** Frosted glass **GRID** Protective Glass Grid Cover **WS20"** Wall support 20" **WS40"** Wall support 40" **SPT** Single Pole top adaptor **DPT** Double pole top adaptor **Jbox** Plate Jbox cover **PEN1** Single Fixture Pendant **PEN2** Double Fixture Pendant **OCC1** Occupancy Sensor(on/off) **OCC2** Occupancy Sensor(Hi/Lo) **PHC** Photocell CONSULT FACTORY FOR PENDANT DETAILS

Performance in Lighting reserves the right to make all necessary changes without prior notice.

Performance in Lighting - 2621 Keys Pointe - Conyers, Georg a 30013 - USA - voice 770.822.2115 - info.usa@pil.lighting
www.performanceinlighting.com

OPTIONAL ACCESSORIES

DESCRIPTION	FINISH	PART NUMBER
GUELL 2/A		
Cover GUELL 2 Asymmetrical	●	**14173694**
Louvre GUELL 2 Asymmetrical		**14173820**
GUELL 2/S		
Louvre GUELL 2 Symmetrical		**14173720**
GUELL 2		
Soft glass GUELL 2	●	**14173994**
Wall support 500 mm/19.69" GUELL 1/2	●	**14173394**
Wall support 1000 mm/39.37" GUELL 1/2	●	**14173494**
Protective grid GUELL 2		**14173502**
Single pole top support GUELL 2	●	**14174094**
Double pole top support GUELL 2	●	**14174194**
Plate Cover JBox	●	**07957**

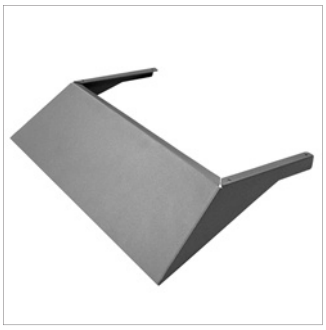

14173694

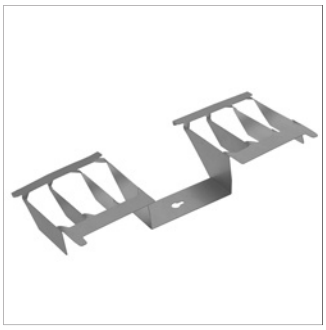

14173820

14173720

14173994

14173394

14173494

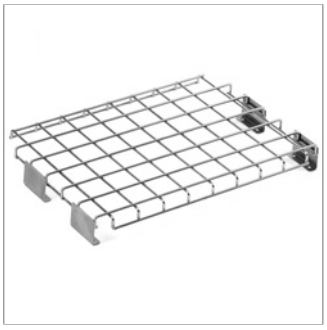

14173502

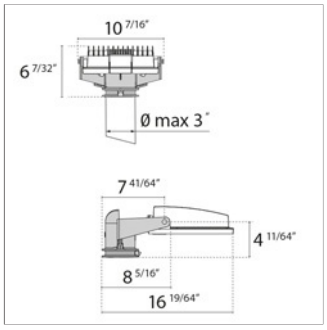

14174094

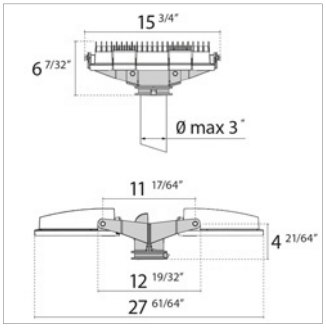

14174194

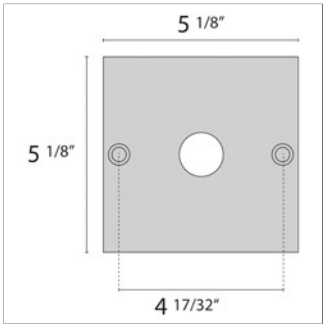

07957

GUELL PENDANTS*

GUELL 1 & GUELL 2 – Single fixture pendant*

- Each fixture has its own stem/pendant (length to be specified by the customer).
- A Ø5” canopy cover that matches the fixture is provided to cover the jbox.
- *NOTE: Single pendants may not hang perfectly straight due to the offset center of gravity.

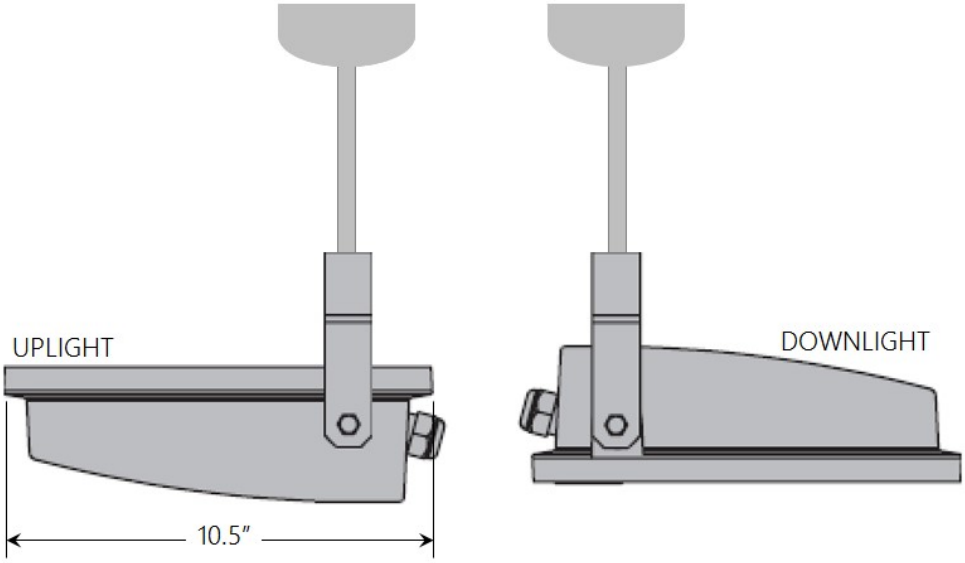

GUELL 1 & GUELL 2 – Double fixture pendant

- Each pair of fixtures has a stem/pendant (length to be specified by the customer).
- A Ø5” canopy cover that matches the fixture is provided to cover the jbox.

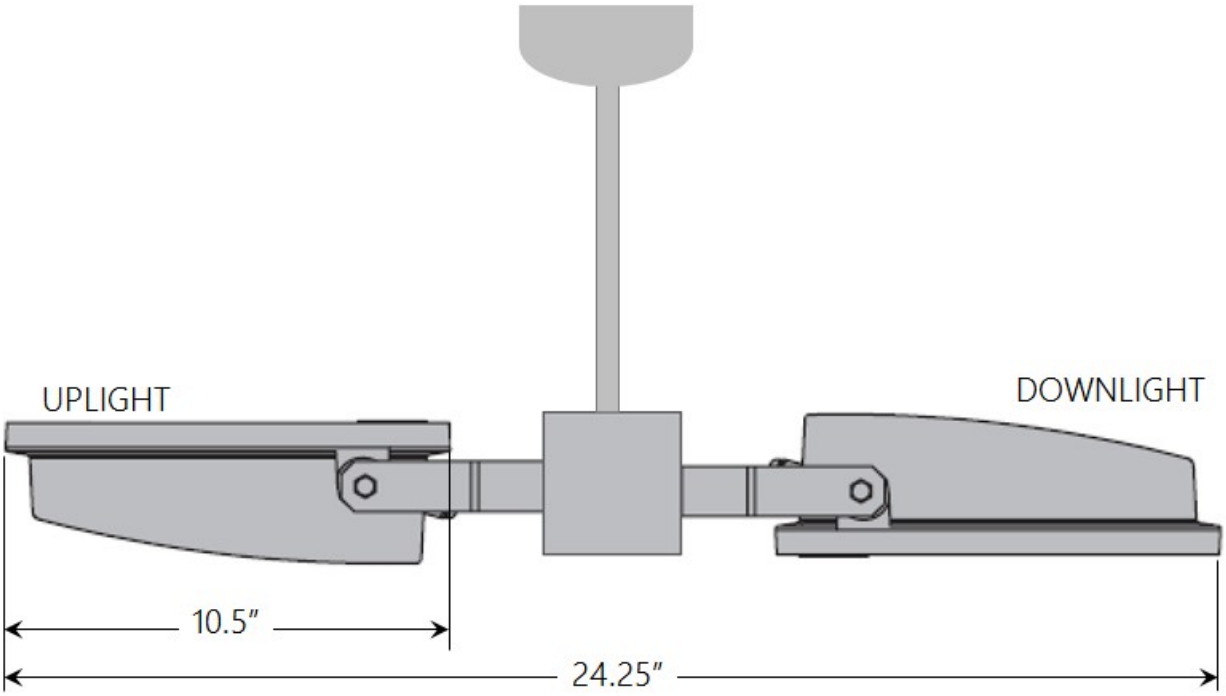

REMOTE RGBW ACCESSORIES

Power Supply

17433
Kit driver 48V

17096
Kit driver 48V WP

RF Controls

310417-7
RGBW RF controller 4 channel
(0.70A each CH)

310417-7-WP
RGBW RF controller WP 4 channel
(0.70A each CH)

310429
RGBW hand held remote

DMX Controls

17897-7
RGBW DMX enabler/decoder 4
channel (0.70A each CH)

17897-7-WP
RGBW DMX enabler/decoder WP 4
channel (0.70A each CH)

11015
Terminating Resistor

110150
Terminating Resistor WP